Zinc Range Hood with Brass Straps

Technical Drawing • Dimensions • Proportions

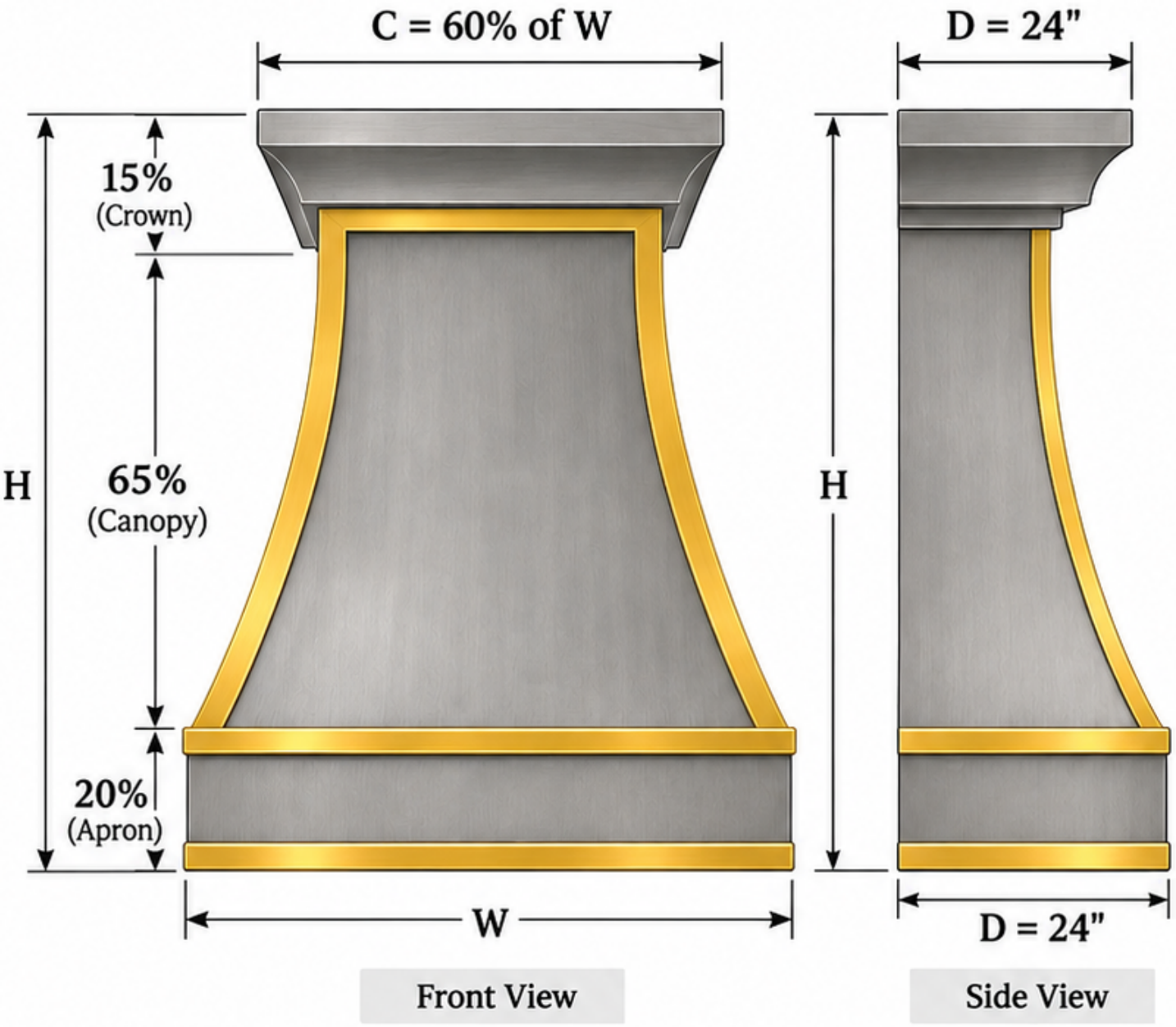

Front View

Side View

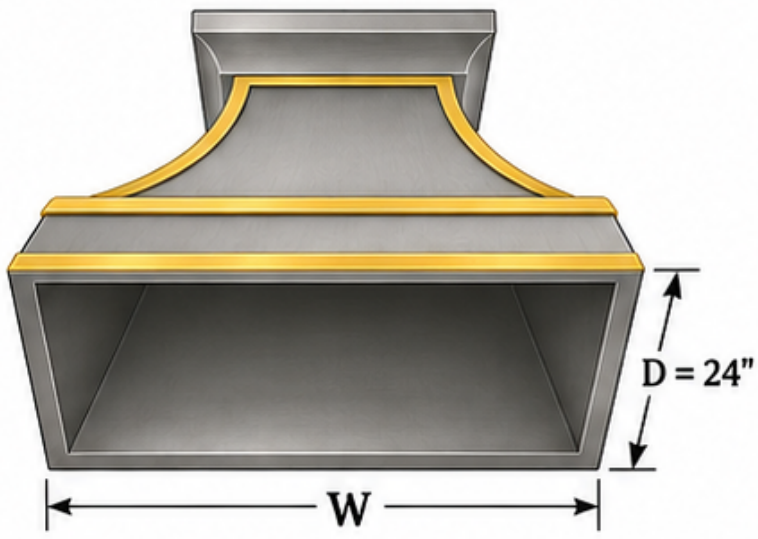

Underside View
(No Insert)

Standard Proportions	
Section	**% of Total Height (H)**
Crown	15%
Canopy (curved body)	65%
Apron	20%

Available Dimensions (Custom Made)	
Width (W)	28" – 78"
Height (H)	24" – 72"
Depth (D)	24" (standard)
Installation	Wall mount or island
Material	Zinc with brass straps
Finish	Smooth zinc (as shown)
Gauge	16-gauge

Example Dimensions by Width

Hood Width (W)	Crown Width (C) (60% of W)	Total Height (H) (example)	Crown (15%)	Canopy (65%)	Apron (20%)	Depth (D)
30"	18"	30"	4.5"	19.5"	6"	24"
36"	21.6"	36"	5.4"	23.4"	7.2"	24"
48"	28.8"	48"	7.2"	31.2"	9.6"	24"
60"	36"	60"	9"	39"	12"	24"
72"	43.2"	72"	10.8"	46.8"	14.4"	24"